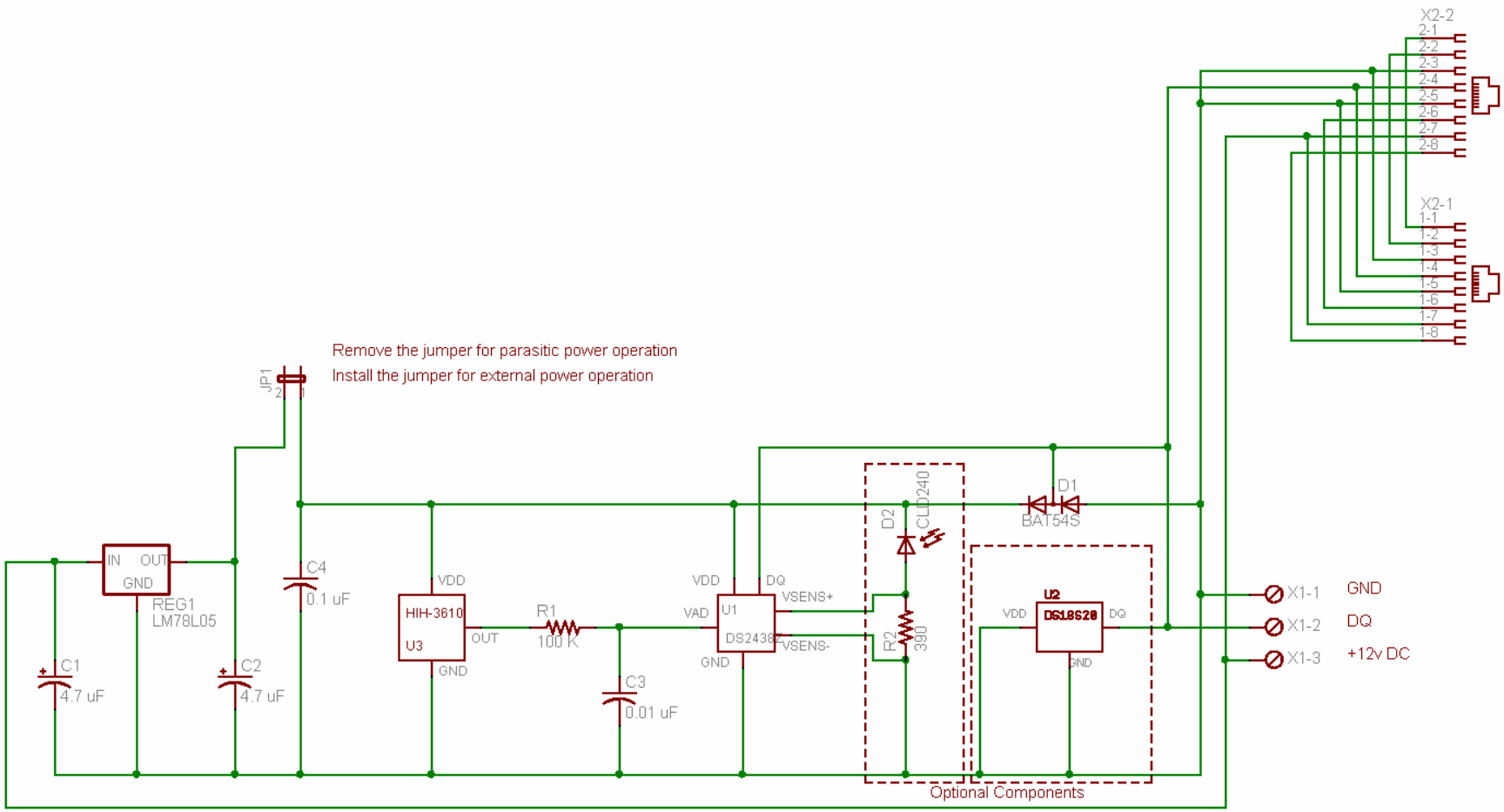

Humidity / Temperature / Solar

(c) 2005-2006 Hobby Boards Board by Eric Vickery

TITLE: Humidity3.1	
Document Number:	REV: 3.1
Date: 3/20/2006 11:22:33p	Sheet: 1/1